MARYLAND COOPERATIVE EXTENSION
UNIVERSITY OF MARYLAND
COLLEGE PARK•EASTERN SHORE

Fact Sheet

Fact Sheet 795

The Barn Owl:

Friend of Agriculture and Communities

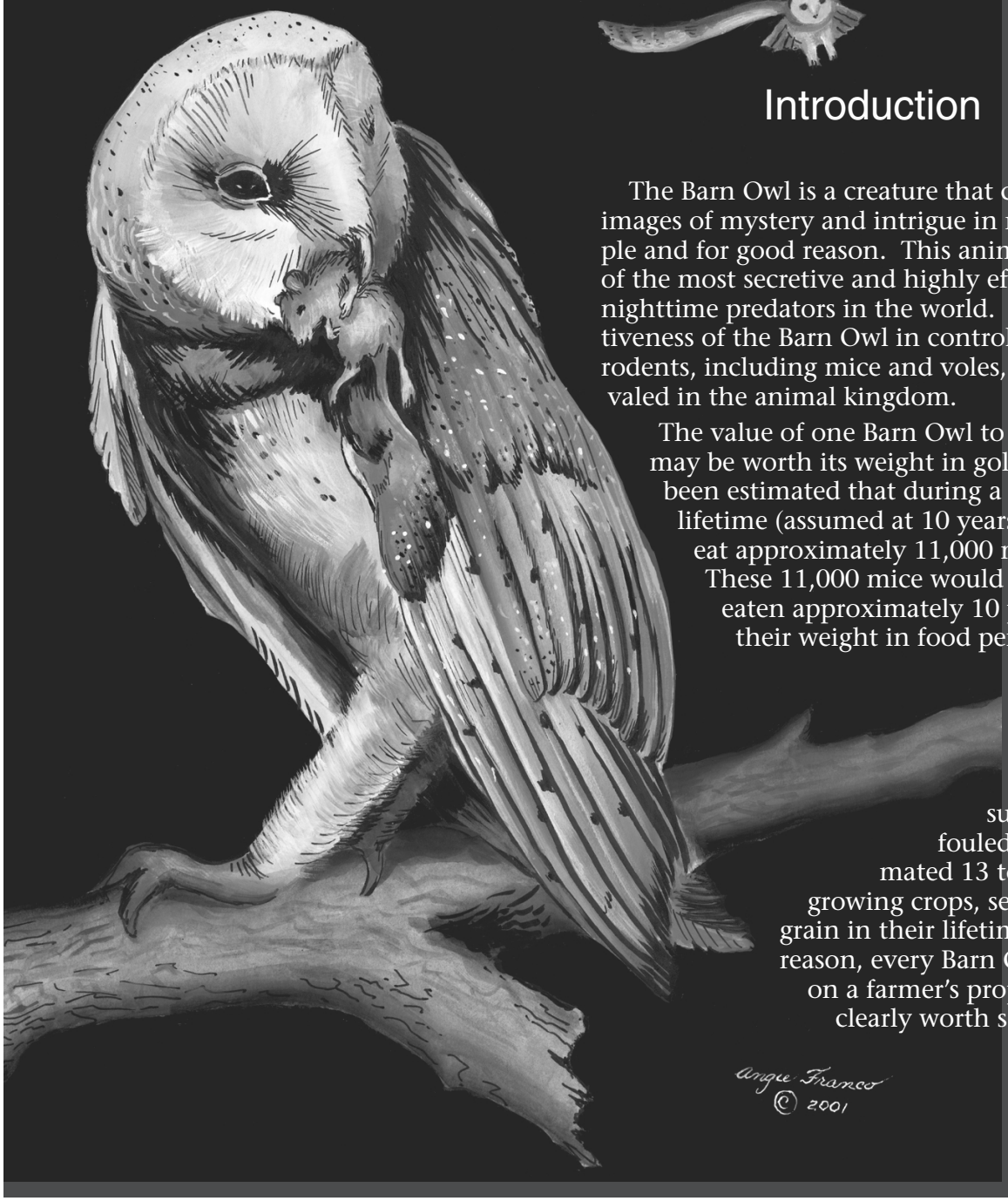

Introduction

The Barn Owl is a creature that conjures images of mystery and intrigue in many people and for good reason. This animal is one of the most secretive and highly effective nighttime predators in the world. The effectiveness of the Barn Owl in controlling rodents, including mice and voles, is unrivaled in the animal kingdom.

The value of one Barn Owl to a farmer may be worth its weight in gold. It has been estimated that during a Barn Owl's lifetime (assumed at 10 years) it would eat approximately 11,000 mice. These 11,000 mice would have each eaten approximately 10 percent of their weight in food per day. These 11,000 mice might have consumed or fouled an estimated 13 tons of growing crops, seeds, and grain in their lifetime. For this reason, every Barn Owl living on a farmer's property is clearly worth several

hundred dollars in reduced crop damage and other benefits. This fact sheet will describe many aspects of the Barn Owl including identification, distribution, habitat preferences, food habits, and how to try to attract Barn Owls to your property.

Unfortunately, Barn Owls have not always been held with such high regard. Until the late 1970's, Barn Owls were often shot by landowners because they were considered vermin. Because Barn Owls hunt by night, their ability to control rodents was not known by the average landowner. As education regarding the Barn Owl increased, negative actions against Barn Owls decreased.

Barn Owls and all other raptors or birds of prey (hawks, owls, eagles, falcons, and vultures) are protected under the Migratory Bird Treaty Act. The law states that it is illegal to handle, harm, or harass these birds or their nests in any way.

Identification

It has been referred to as the monkey-faced owl, ghost owl, and spirit owl. Regardless of the name you choose the Barn Owl is definitely unique. The Barn Owl is the only member of its family (*Tytonidae*) in North America. It differs from other owls, such as the great horned owl and barred owl, in three primary ways. The Barn Owl has a heart-shape facial disk unlike other owls' facial disks that are normally round. It also has a comb-like claw on its middle toe that is not present on other owl species. Finally, the Barn Owl has a relatively short and square tail, where other owls have longer, more rounded tails.

The most common identifying marks of the Barn Owl include the bright white under body and the heart-shaped facial disk. If seen in the field, these two features normally give it away. Also, if you happen to hear an owl "hooting" at night, it most likely is not a Barn Owl. The Barn Owl does not "hoot" like many other owls. The owl's call has been described as a shrill, rasping hiss or snore such as *kschh* or s*hiiish*.

Distribution

The Barn Owl is one of the most widely distributed raptor species in the world. It can be found on every continent except Antarctica. The bird is also found widely throughout the United States except for the Appalachian Mountains, northern New England and the northern plains areas.

In Maryland, Barn Owls can be found in most every county except for far western Maryland. Concentrations of nesting Barn Owls have been identified in several counties in central Maryland and the Eastern Shore.

Habitat

The habitat preferred by the Barn Owl is a mixture of grasslands, groves, farm fields, and pastures. The birds prefer to roost in old buildings, silos, and of course barns. Barn Owls favor low arable land as well as marshes near the Chesapeake Bay. The birds have even been found nesting in hunting blinds along marshes of the Eastern Shore.

Barn Owls are traditionally cavity nesters which means they prefer to raise their young in a large hole in a tree or in an appropriate spot in a barn or silo. Removal of older trees has created a limited number of cavities for nesting Barn Owls. For this reason, we can encourage Barn Owls to use nest boxes, if properly constructed and placed around suitable habitat, that mimic their traditional nest sites.

Food Habits

Barn Owls eat a wide variety of prey. However, while studies show their diet may be diverse, they tend to concentrate the majority of their hunting efforts on just a few species. Small mammals, including mice, voles, and shrews make up the largest portion of their diet. Other food items taken less frequently include bats, birds, lizards, and insects. It is important to note that Barn Owls do not eat chickens.

Barn Owls normally start to hunt around dusk or even before dusk at times. If great horned owls (a major predator of Barn Owls) are known to be in the area, Barn Owls may

limit their hunting to the darkest hours of the night. Barn Owls normally hunt by flying up and down open grassland or field areas looking and listening for prey. At times they will fly against the wind so that they will not fly too quickly, missing potential prey animals.

Why Try to Use Natural Pest Control?

When trying to manage rodent populations, it is important to remember that Barn Owls will not remove all rodents from a given area. That is not how Mother Nature works. However, Barn Owls are capable of maintaining a rodent population at normally acceptable levels.

There are a few advantages to using Barn Owls for rodent control. First, rodenticides (rodent poisons) that come in the form of baits, pellets, or powders will likely cost more money over the long term than erecting a Barn Owl box. Certain rodenticides have the ability to travel up the food chain and harm or kill non-target or even beneficial animal species.

The Barn Owl vs. the Domestic Cat for Rodent Control

Research has shown that a Barn Owl throughout the course of a year will consume approximately 3 to 5 times the number of rodents that a cat consumes. Also, cats are responsible for killing a large number of birds, most of which are not considered pests. A study conducted in Wisconsin suggests that cats allowed to go outside, whether in an urban or rural setting, are responsible for killing approximately 39 million birds a year. It is important to note that this figure only represents the birds killed by cats in the state of Wisconsin in one year. The national estimate for the number of birds killed by cats each year is 465 million.

Barn Owls are part of the natural landscape, while domestic cats are not native predators in North America. Research is showing that cats are having a profoundly negative impact on small mammal and bird populations around the country. When it comes to effectively and naturally controlling rodents, the Barn Owl is far superior to the domestic cat.

Conservation and Status in Maryland

As mentioned earlier, before many educational campaigns regarding the Barn Owl were conducted across the country, many Barn Owls were shot and hung out on fence posts to supposedly deter other owls from coming around. If Barn Owls were found dead, but not shot, they often died as a result of poisoning. Many of the anti-coagulant types of rodent poisons available on the market can be transmitted up the food chain. The owls would, and still do, ingest mice that have been poisoned and they in turn are poisoned and become very sick or die.

Today, the Barn Owl population in Maryland is considered to be stable throughout its range, although continued habitat destruction from development may pose problems for the population in the future. We may play a vital role in the future of the Barn Owl's success by providing nesting sites needed to ensure a stable population.

Providing Nesting Sites for Barn Owls

Barn Owls will nest in properly constructed and mounted nest boxes. The birds are not considered to be finicky and will nest in a variety of places that are dark and normally elevated at least 12 feet above the ground.

Plans for building a Barn Owl nest box may be found at the end of the fact sheet.

Barn Owls do not exhibit strong territorial instincts and will nest relatively close to other Barn Owls if adequate food is present. For this reason, nest boxes may be placed a few hundred yards apart. Research from California suggests that between four to six Barn Owl boxes can be placed in a 50-acre area. This does not suggest that 50 acres of land is needed to attract Barn Owls. If the proper habitat is available with a proper nest

site, along with available food, Barn Owls may be attracted to the area regardless of the size of the property. Large expanses of open (non-forested) habitat are needed to support Barn Owls. This large acreage of grassland, agricultural fields, etc. does not have to be in one ownership, but a small acreage of suitable habitat surrounded by forestlands will probably not attract Barn Owls.

Nest boxes may be erected in different ways. It is important to erect the Barn Owl box or boxes in the way that best suits your needs.

Important Considerations for Placing a Barn Owl Nest Box

- It should be in an area that has low human activity.
- The entrance of the hole should face away from prevailing winds.
- Do not place the box above metal vehicles because the owl's fecal material is corrosive.
- The nest box should not be too high so as to prevent safely inspecting and maintaining the box. A good height is 12 feet off the ground.

If you have a barn or abandoned silo on your property, it may serve as an excellent place to locate a Barn Owl nest box. If the entrance hole of the box is on the inside of the barn, the area below the entrance hole should be free of items that need to be kept clean. A nest box design for barns and silos is provided at the end of the fact sheet. *An important note is that a barn or silo is not needed to attract Barn Owls. Boxes placed in other out buildings (other than a farmhouse) can also work.

A second possible location to mount a nest box is on a large tree. The box should be a minimum of 12 feet off the ground. One potential problem with tree mounting is that nestlings and even adult birds may be at a greater risk of predation from opossums, raccoons, and great horned owls.

Finally, nest boxes may be mounted on a 16'x4"x4" pole. This pole should then be put in a 3-foot-deep hole. A bag of concrete (although not necessary) mixed around the pole will provide the pole with good support. Be sure to use a level on two different planes of the pole to ensure the pole is vertically level. The pole should have a predator baffle or guard placed around it at 4 to 5 feet above the ground. This may be in the form of a 3-foot diameter metal cone or a 24-inch wide piece of aluminum flashing tightly wrapped around the pole. Boxes mounted on poles should be within 100 yards of a large tree to provide cover for young after they leave the nest.

You may want to try a combination of these different techniques if all or a couple of the nest box mounting opportunities exist on your property.

Monitoring and Maintaining Your Nest Boxes

Before you decide to erect Barn Owl nest boxes, you must first realize that the boxes will need to be monitored and maintained. Erecting nest boxes is the first step, but monitoring and maintaining the boxes is equally as important. Fortunately, Barn Owls do not require a lot of attention, but inspecting and cleaning out the boxes will be necessary from time to time.

Barn Owls in Maryland may be found nesting at any time of the year, although the peak nesting period is between April and July. Nest boxes should be checked once a year in late fall or early winter. VERY IMPORTANT! You must be as quick and quiet as possible when checking a Barn Owl box. If a female Barn Owl is sitting on eggs in the nest, quickly and quietly close the box and do not disturb the owls again. Checking the nest while the female is incubating could cause her to abandon the nest and/or destroy the eggs. Also, never knock on the post to see if birds fly out. For these reasons, it is important to check the boxes only in the fall or early winter, which is the least likely time to find Barn Owls in the boxes.

During the nest box inspection, all nest materials, feathers, dirt, animal parts, bees or wasps, and pellets should be removed. You should always wear a dust mask when cleaning out any bird house to avoid inhaling undesirable dust and nest parasites. After this cleaning out is complete, it is advised that the box be sprayed with a 2-percent bleach

solution to thoroughly disinfect the box. Never use insecticides inside the nest box.

References

Bendel, P.R. and Therres, G.D. 1990. "Nesting Biology of Barn Owls from Eastern Shore Marshes." *Maryland Birdlife*, vol. 46, #4, pp. 119-123.

Bendel, P. R., and Therres, G. D. 1992. "Barn Owl diets from Eastern Shore marshes." *Maryland Birdlife*, vol. 48, #1, pp. 3-6.

Coleman, J.S., Temple, S.A., and Craven, S.R. 1997. *Cats and Wildlife: A Conservation Dilemma*. Madison: Wisconsin Cooperative Extension.

Hoffman, T. 1997. *Using Barn Owls for Rodent Control*, World Wide Web Publication - http://members.tripod.com/Tommy51/

.

Johnsgard, P. A. 1988. *North American Owls: Biology and Natural History*. Washington: Smithsonian Institution Press.

Maryland Department of Natural Resources, *The Barn Owl: Friend of the Farmer.* Annapolis: Wildlife and Heritage Division.

Pimentel, D., Lach, L., Zuniga, R., and Morrison, D., 1999. *Environmental and Economic Costs Associated with Non-indigenous Species in the United States*. Ithaca: College of Agriculture and Life Sciences.

Taylor, I. Barn *Owls: Predator-Prey Relationships and Conservation*. New York: Cambridge University Press.

Appendix

Parts List

1. One sheet of ½-inch CDX plywood (5 ply).
2. One 16 foot 4x4 post (redwood or pressure treated) to extend 12 feet above ground.
3. Four 1-inch L-brackets with eight ¾-inch No.10 flat-head sheet metal screws.
4. Two 4½ -inch by ⅜-inch carriage bolts with nuts and washers for mounting the box to the post.
5. Two 2x2-inch tight pin hinges with screws.
6. Two 13-inch 2x2's for spacers.
7. One 1½-inch hook and eye for clean out door.
8. Four 3½-inch by ¼-inch carriage bolts with nuts and washers for top assembly.
9. 1¼-inch galvanized box nails.
10. Paint or stain (light natural wood color or clear stain).

Note: This nest box design may be installed in a tree, on a post, or in a barn or silo. The diagram specifically shows how to install the nest box on a post.

General instructions: All joints must be glued before nailing. Nails should be placed ¼ inch from edges, spaced 3 to 4 inches apart. If nail does not go in straight, remove with pliers before finishing pounding.

Step 1. Cut plywood sheet as shown. Measure, mark and cut entrance hole on front. Drill four ½" holes in the bottom for drainage. Cut 6"-wide clean-out flap from end of one side.

Step 2. Nail back panel to left side, then turn assembly over and nail front panel to left side. Insert floor between front and back panels. Align lower edges and nail through front into the floor. Carefully turn assembly over and nail through back into floor. Insert upper portion of right side between front and back panels. Align upper edges and nail through back. Turn over. Again, align upper edge and nail through front. Nail through left panel into floor.

Step 3. Attach hinges to upper edge of flap then attach to lower portion of right panel. Drill ⅛" hole in lower edge of flap and screw in eye. Measure 1½ inches from eye on floor. Mark, drill, and screw in hook. Glue predator guard to inside of front and to floor. Set assembled box aside for 24 hours to allow glue to dry.

Step 4. Position roof, spacers and sun shield as shown (sun shield is recommended if the box is placed on a pole in an open area). Clamp together and drill through all pieces with ¼" bit. Fasten together with ¼" carriage bolts. Position L-brackets on underside of roof as shown and attach with screws so that they will fit over the edges of the side and front panels.

Step 5. Paint or stain all exposed surfaces.

Step 6. Center back of box on one end of post with upper edge of box flush with top of post. Drill through box and post together and attach with ⅜" carriage bolts. Position top assembly and attach by screws through L-brackets.

Barn Owl nest box plans reprinted and adapted with permission from Tom Hoffman of Biodiversity Products.

Additional Resources

Maryland Department of Natural Resources, website: www.dnr.state.md.us.

Fact Sheet Reviewers

Joel Flory
Wildlife Specialist
Utah State Cooperative Extension Service

Glenn Therres
Biodiversity Program Manager
Maryland Department of Natural Resources

Robert Tjaden
Regional Specialist, Natural Resources
Maryland Cooperative Extension

FIGURE 1. Plywood sheet cut template

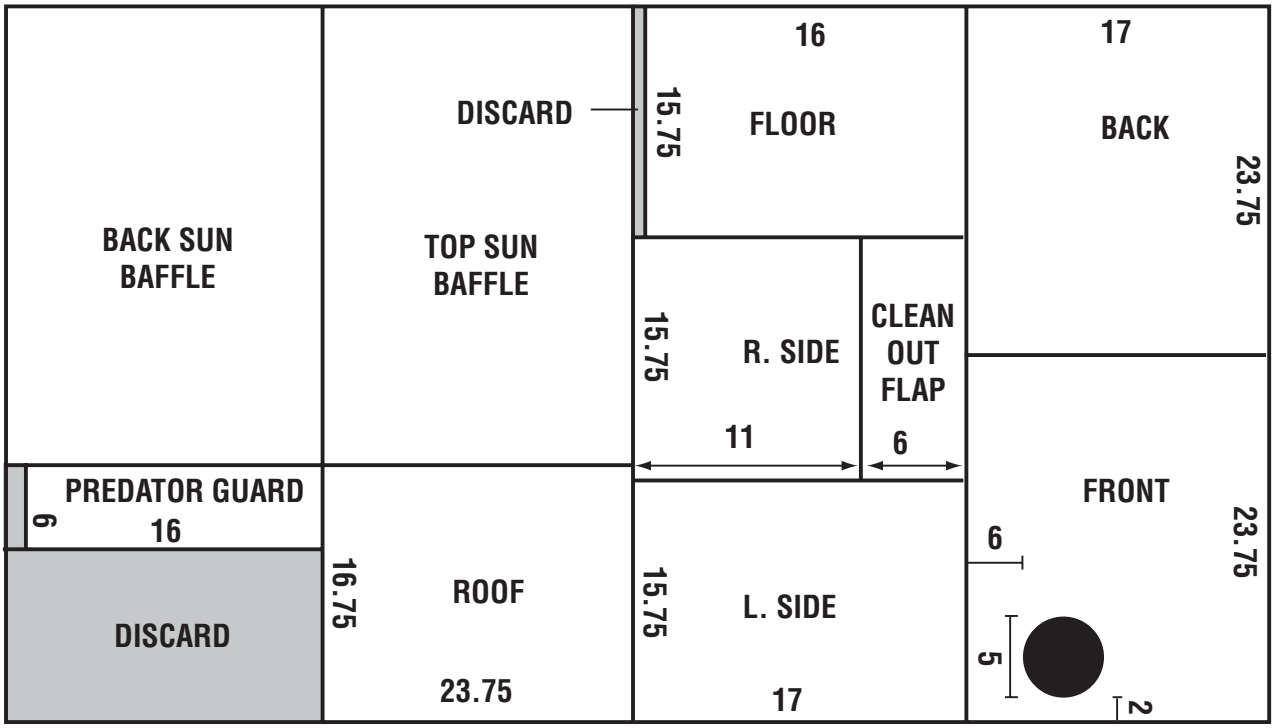

FIGURE 2. Front view

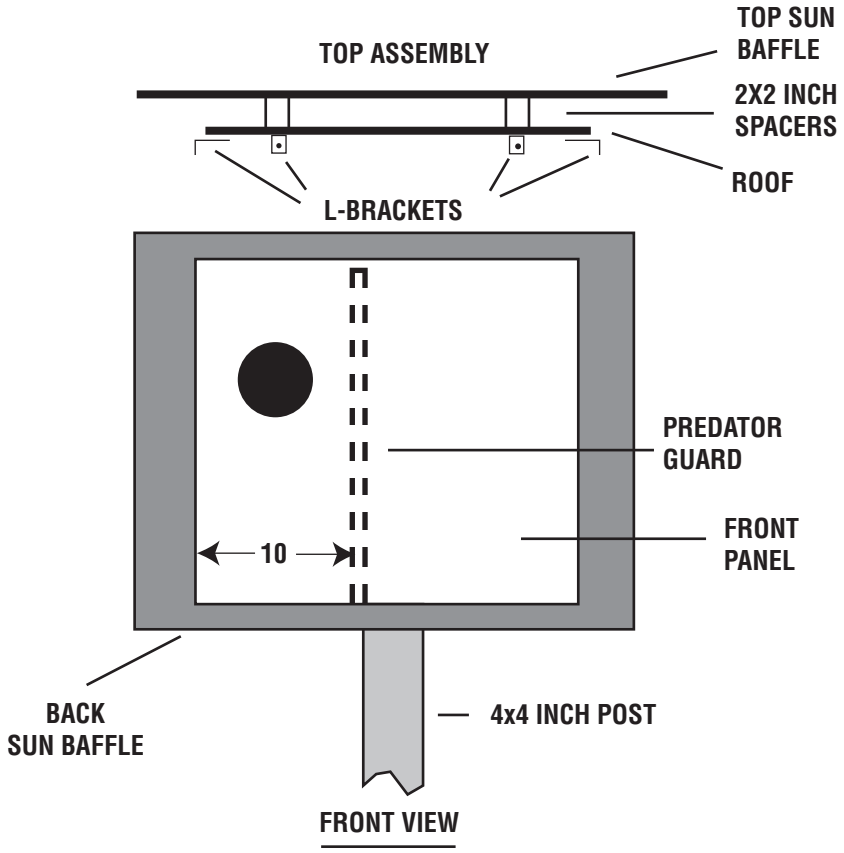

FIGURE 3. Side and bottom views

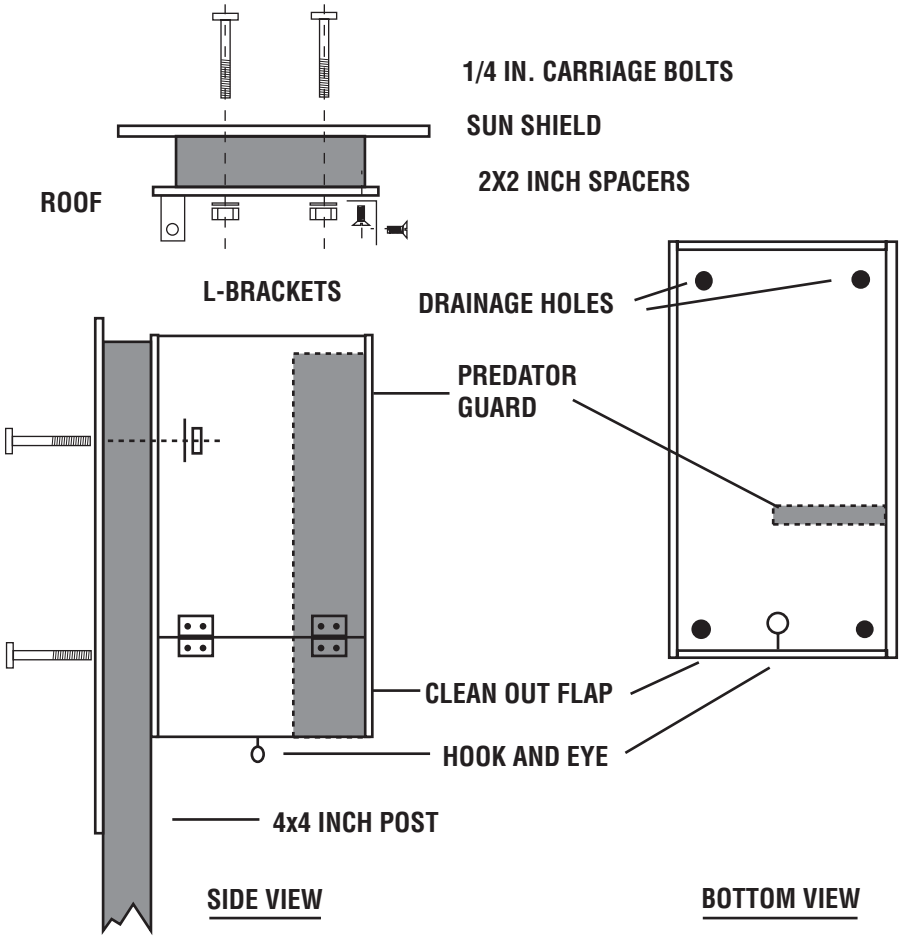

The Barn Owl: Friend of Agriculture and Communities

by

M. Allan Daly
Extension Educator
Baltimore County

Issued in furtherance of Cooperative Extension work, acts of May 8 and June 30, 1914, in cooperation with the U.S. Department of Agriculture, University of Maryland, College Park, and local governments. Thomas A. Fretz, Director of Maryland Cooperative Extension, University of Maryland.

The University of Maryland is equal opportunity. The University's policies, programs, and activities are in conformance with pertinent Federal and State laws and regulations on nondiscrimination regarding race, color, religion, age, national origin, sex, and disability. Inquiries regarding compliance with Title VI of the Civil Rights Act of 1964, as amended; Title IX of the Educational Amendments; Section 504 of the Rehabilitation Act of 1973; and the Americans With Disabilities Act of 1990; or related legal requirements should be directed to the Director of Personnel/Human Relations, Office of the Dean, College of Agriculture and Natural Resources, Symons Hall, College Park, MD 20742.

P2002